LEGEND
STRUCTURES

Model: S-HEX-36-4-MG-10108
Project Name:
Location:

Drawing List	
Sheet #	**Sheet Name**
CS	Cover Sheet
1	Rendering
2	Architectural Views
3	Framing Plans
4	Column Layout
5	Roofing Details

NOT FOR CONSTRUCTION!

These are drawings are for preliminary use only.

Final dimensions, member sizes, and number of structural members will change based on site specific design requirements.

LEGEND STRUCTURES
Legend Structures, LLC
5500 Military Trail, Ste 22, #281
Jupiter, FL 33458
sales@legendstructures.com

SHEET:
CS

NOT FOR CONSTRUCTION!

These are drawings are for preliminary use only.

Final dimensions, member sizes, and number of structural members will change based on site specific design requirements.

LEGEND STRUCTURES

Legend Structures, LLC
5500 Military Trail, Ste 22, #281
Jupiter, FL 33458
sales@legendstructures.com

SHEET:

1

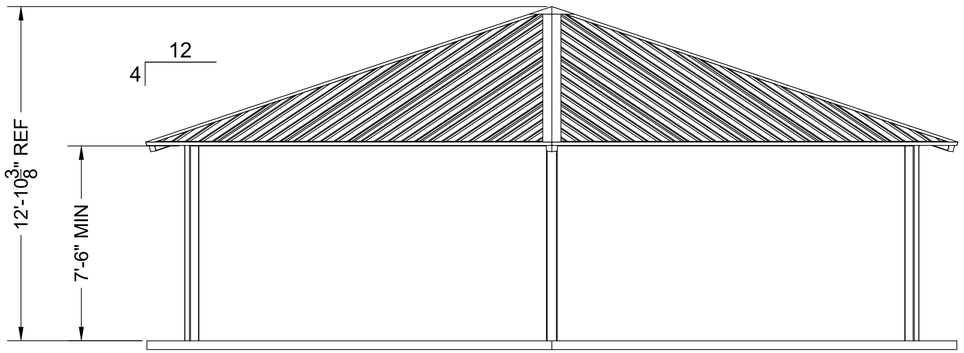

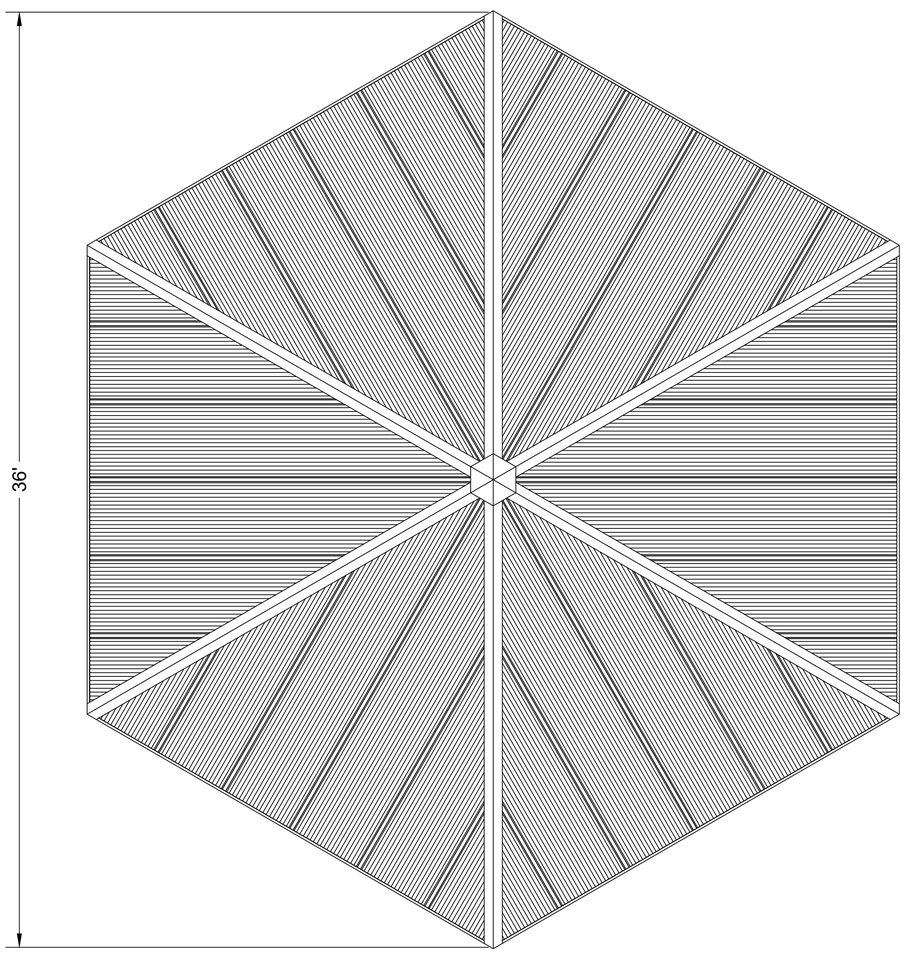

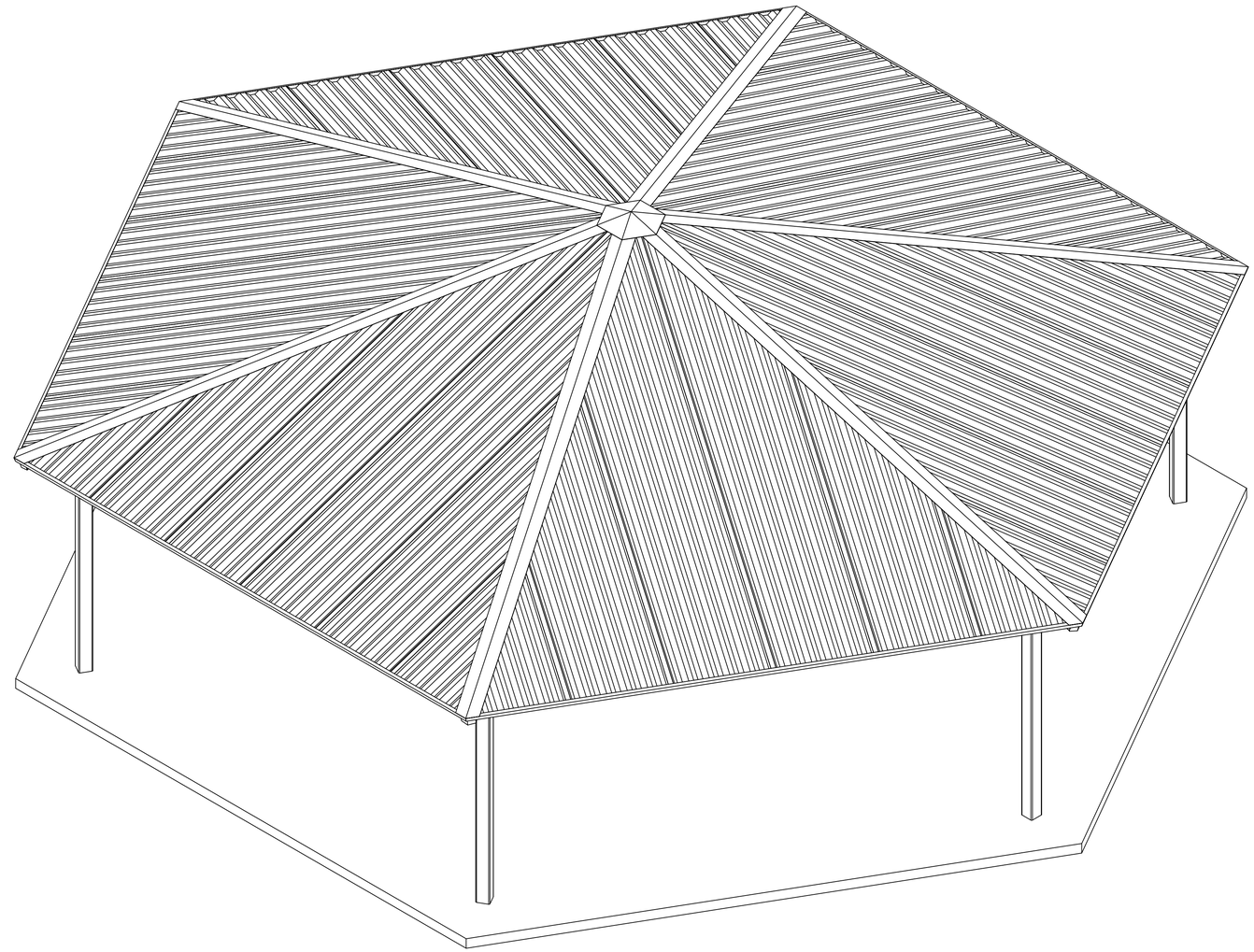

NOT FOR CONSTRUCTION!

These are drawings are for preliminary use only.

Final dimensions, member sizes, and number of structural members will change based on site specific design requirements.

LEGEND STRUCTURES

Legend Structures, LLC
5500 Military Trail, Ste 22, #281
Jupiter, FL 33458
sales@legendstructures.com

SHEET:
2

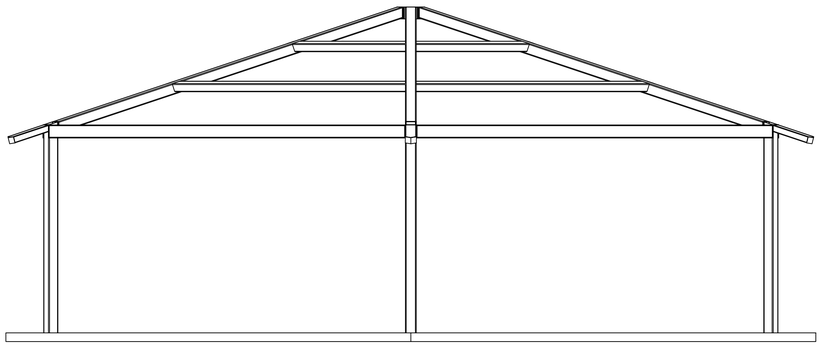

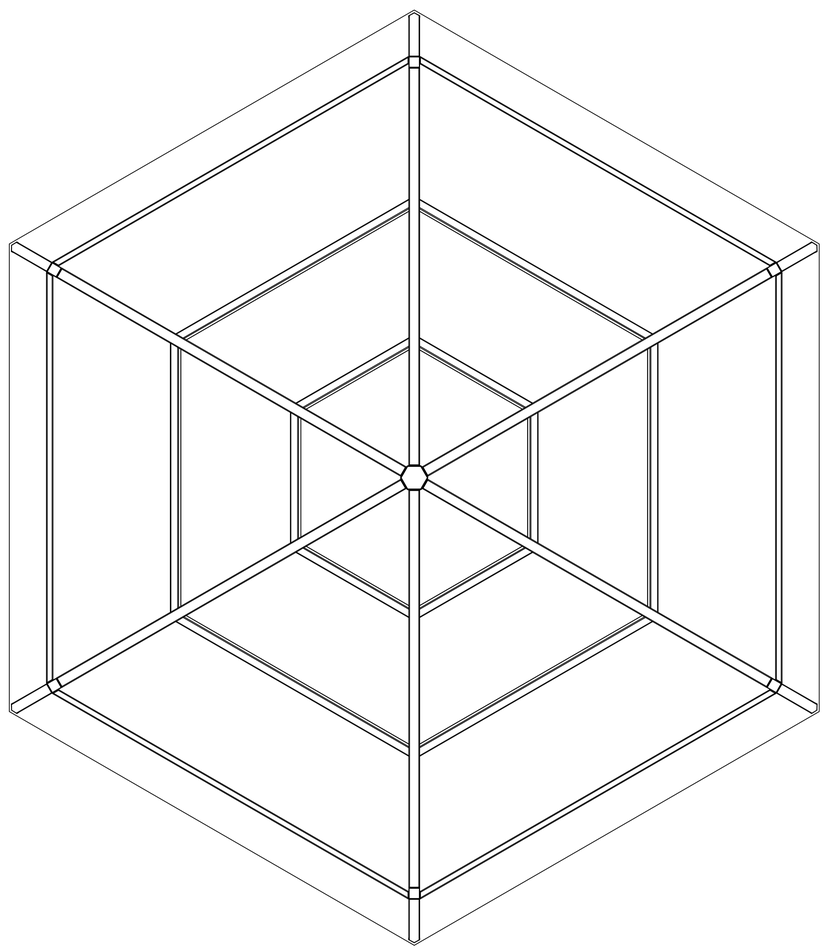

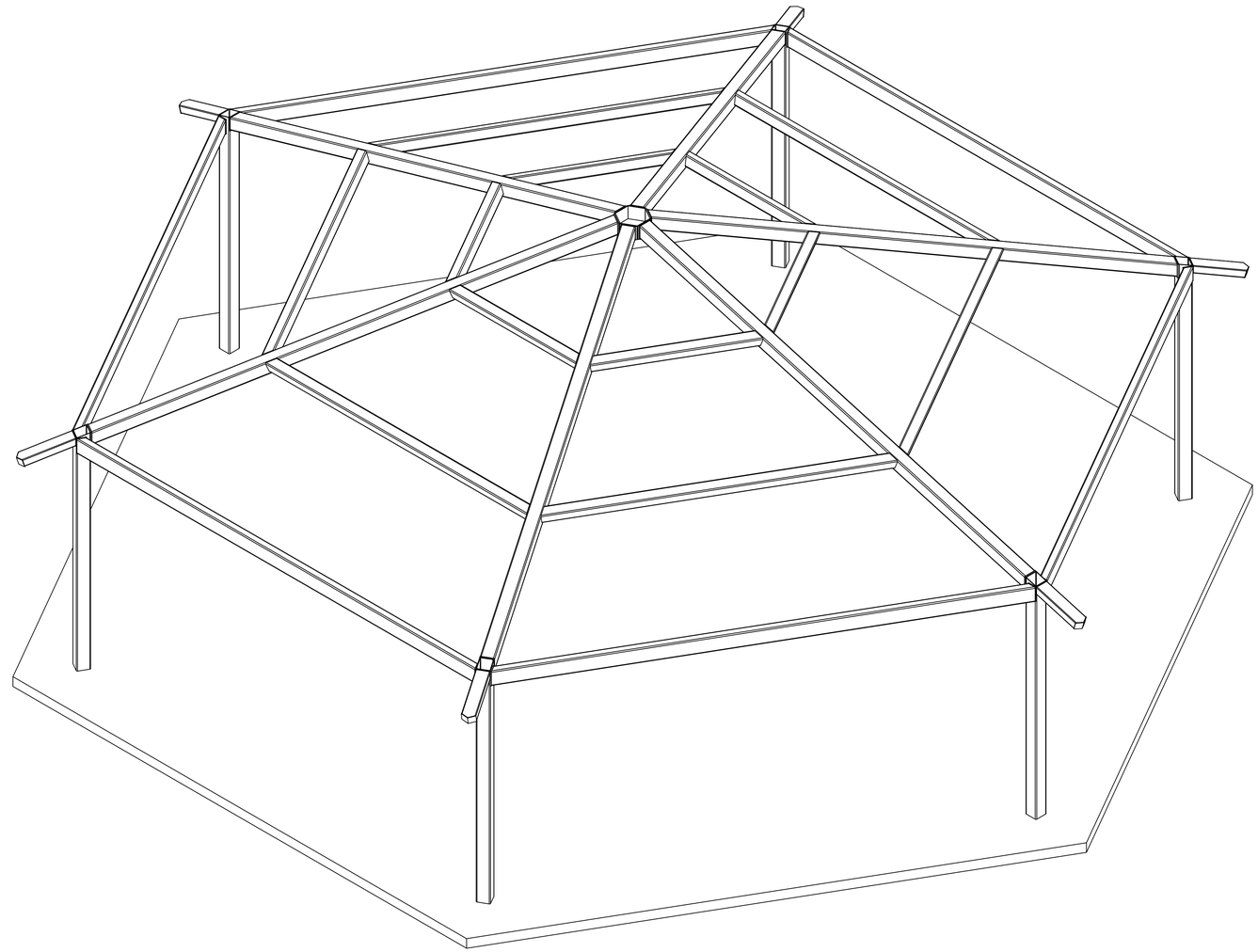

NOT FOR CONSTRUCTION!

These are drawings are for preliminary use only.

Final dimensions, member sizes, and number of structural members will change based on site specific design requirements.

LEGEND STRUCTURES

Legend Structures, LLC
5500 Military Trail, Ste 22, #281
Jupiter, FL 33458
sales@legendstructures.com

SHEET:

3

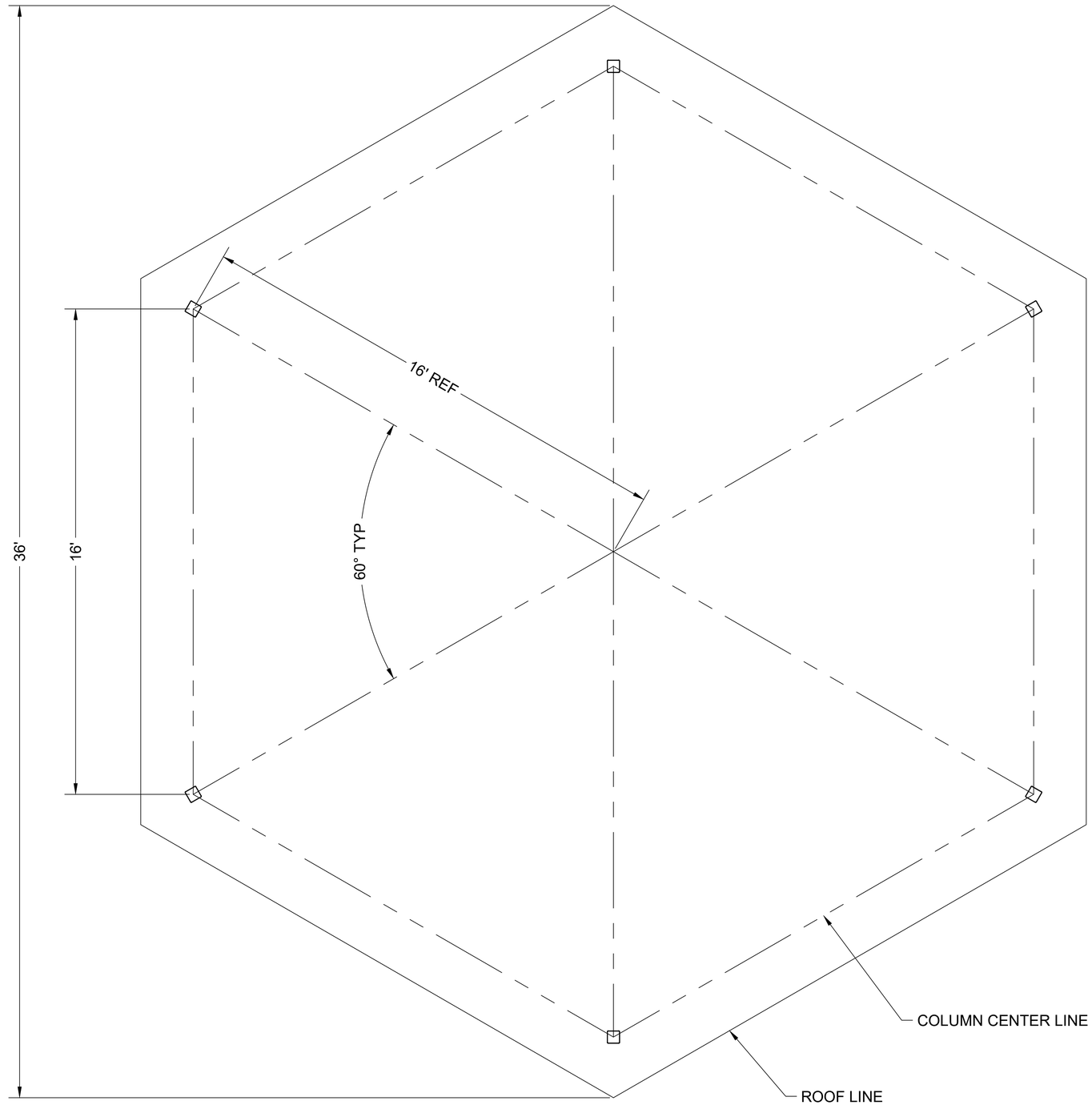

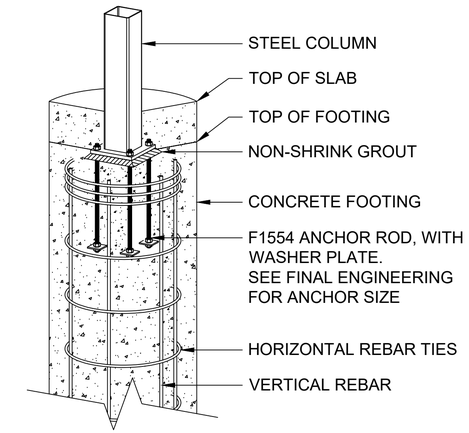

TYPICAL BASE CONNECTION - 8" SUBSURFACE MOUNT

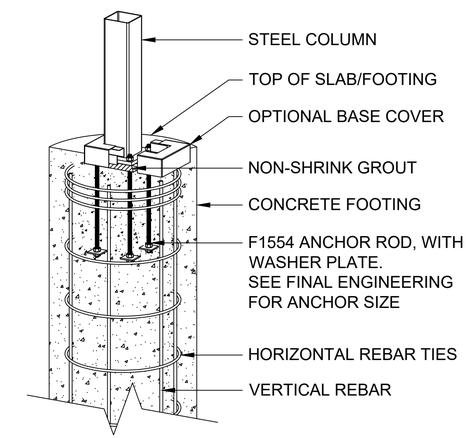

OPTIONAL BASE CONNECTION - SURFACE MOUNT WITH BASE COVERS

NOT FOR CONSTRUCTION!

These are drawings are for preliminary use only.

Final dimensions, member sizes, and number of structural members will change based on site specific design requirements.

LEGEND STRUCTURES

Legend Structures, LLC
5500 Military Trail, Ste 22, #281
Jupiter, FL 33458
sales@legendstructures.com

SHEET: 4

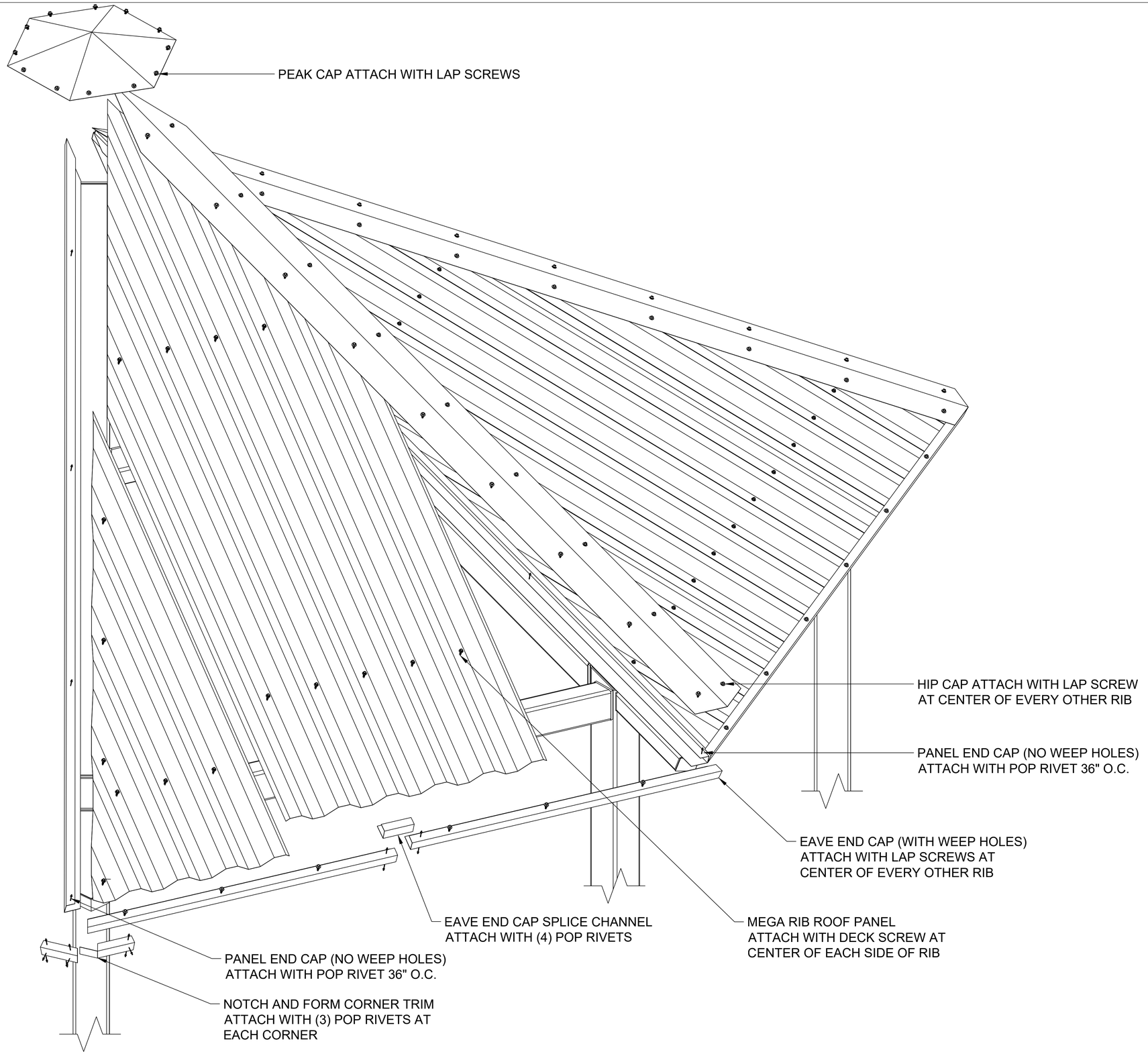

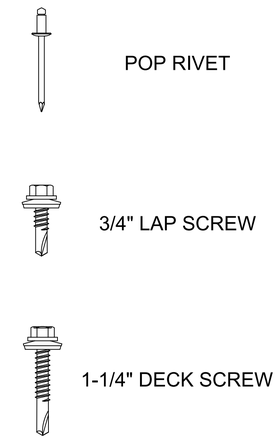

FASTENERS

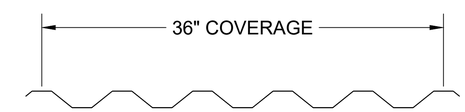

24GA MEGA-RIB ROOF PANEL

NOT FOR CONSTRUCTION!

These are drawings are for preliminary use only.

Final dimensions, member sizes, and number of structural members will change based on site specific design requirements.

LEGEND STRUCTURES

Legend Structures, LLC
5500 Military Trail, Ste 22, #281
Jupiter, FL 33458
sales@legendstructures.com

SHEET:
5